Grade Seven

Finding Areas of Parallelograms | Customary Units

Find the area of each parallelogram

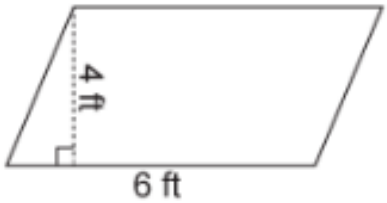

Area = ____ ft^2

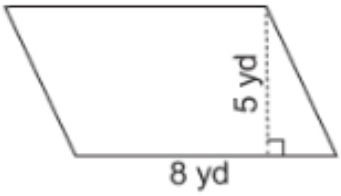

Area = ____ yd^2

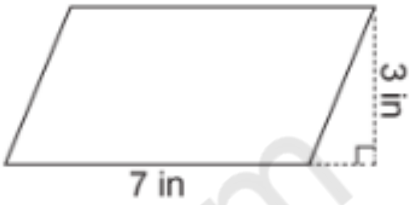

Area = ____ in^2

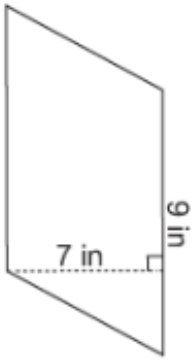

Area = ____ in^2

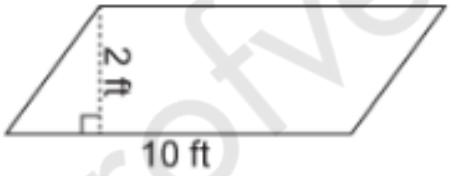

Area = ____ ft^2

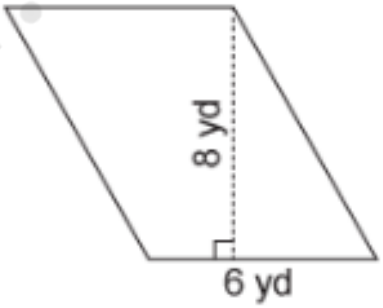

Area = ____ yd^2

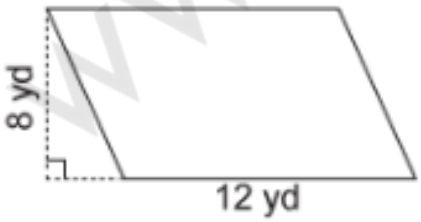

Area = ____ yd^2

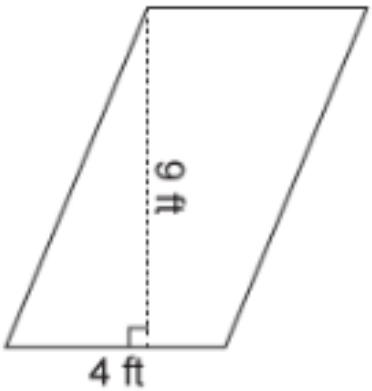

Area = ____ ft^2

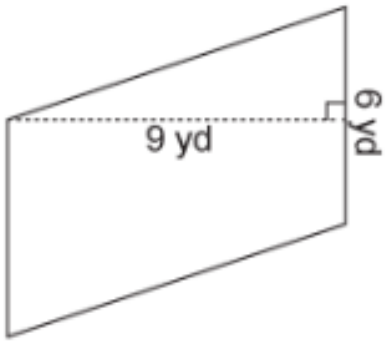

Area = ____ yd^2

www.profved.com

Finding Areas of Quadrilaterals | Metric Units

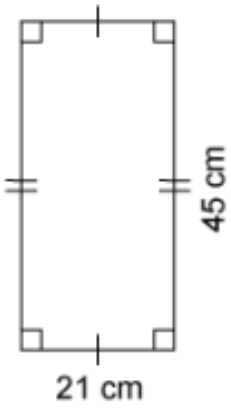

cm²

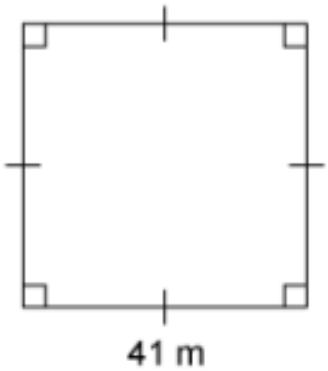

m²

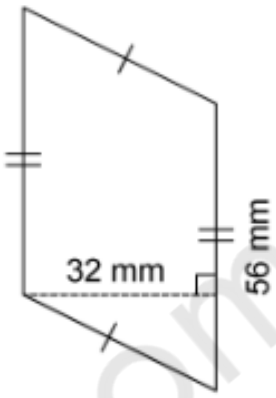

mm²

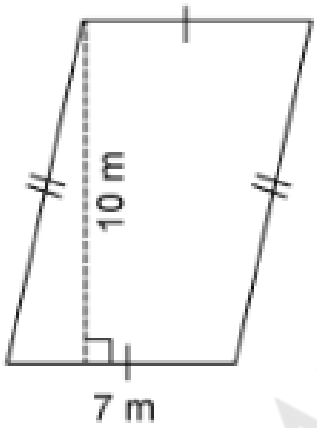

m²

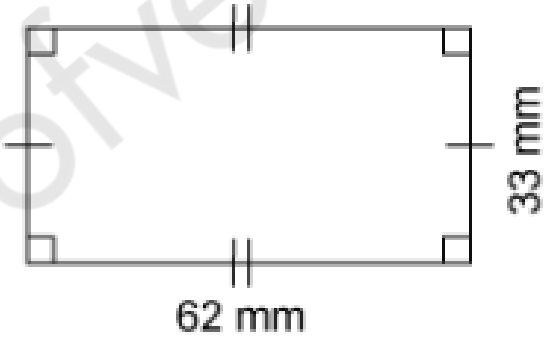

mm²

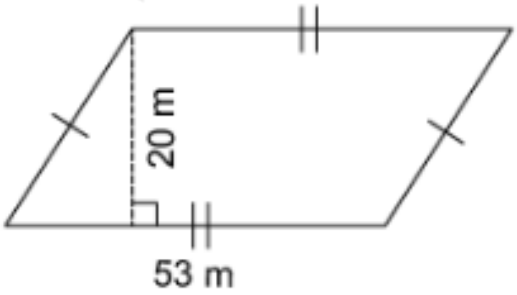

m²

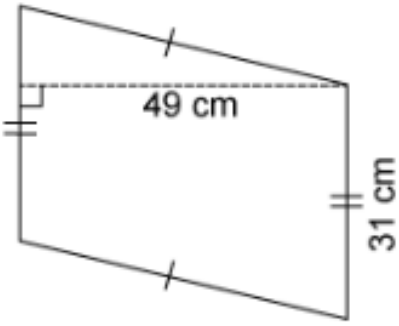

cm²

www.profved.com